masonoliversupply.com

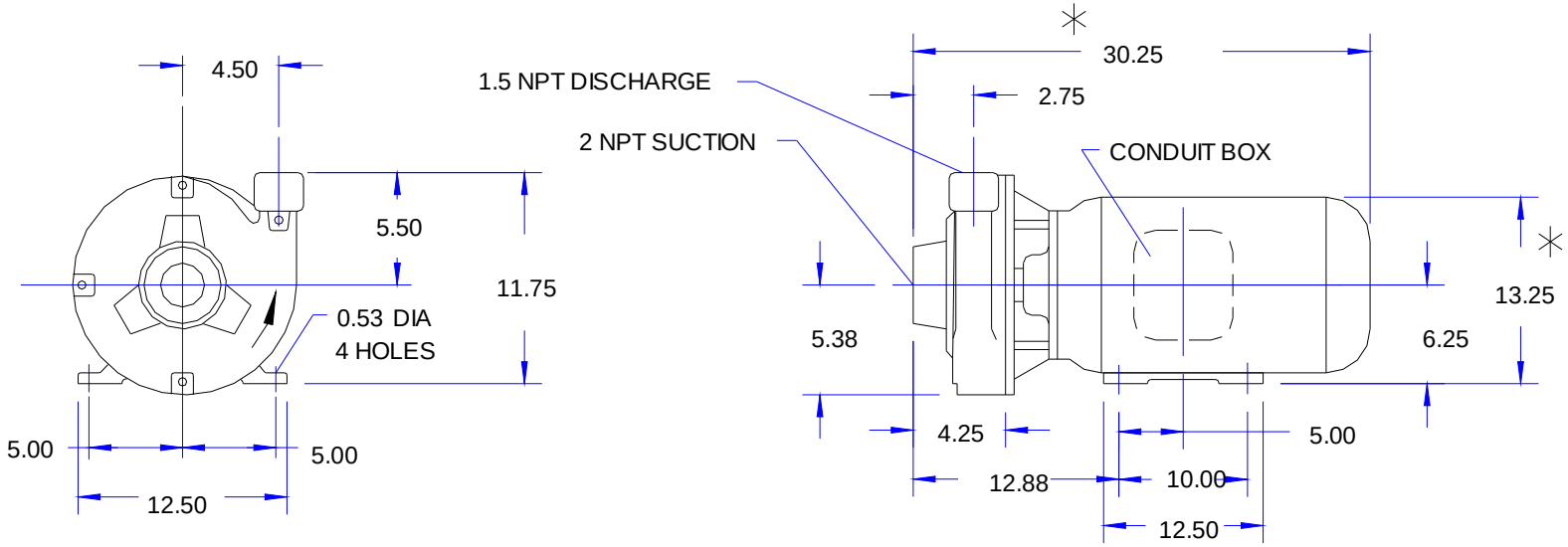

TOTAL WEIGHT w/ODP Motor 401 Lb/ 181.89 Kg
w/TEFC Motor 426 Lb/ 193.23 Kg

C815AM
256JM
MECHANICAL SEAL

* MAXIMUM DIMENSIONS, MAY BE LESS WITH DIFFERENT MAKE MOTORS OR ENCLOSURES.

Dimensions in (inch)

Project :		**Capacity:**	: US gpm)	**Frame/Model:**	256JM
Customer:		**Total Head:**	(ft)	**Elec. Spec.:**	3 Ph. 230/460 V. 60 Hz
Item No.:	1	**Pump Speed:**	3560 (RPM)	**Service Factor:**	1.25
Quote No. :		**Impeller Dia.:**	(inch)	**Rotation:**	Clockwise
Pump Model:	Peerless - C815A	**Power:**	(hp)	**Enclosure/Type:**	TEFC

PEERLESS PUMP®

WWW.MASONOLIVERSUPPLY.COM

Date : Monday, November 14, 2016
Page No : 1